MS70LT Series

D70mm LED Signal Light

- High intensity LED flashing light
- Three mounting options
- Two flashing patterns (built-in slide switch)
- IP 65 (buzzer type- IP50)

Dimensions

unit: mm

G type Surface Mounts

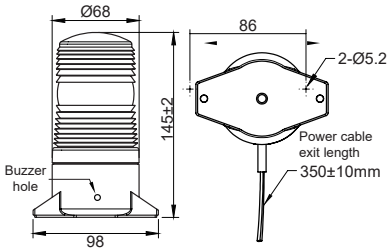

M type Direct Mounts

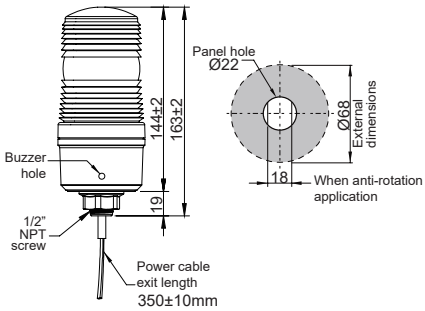

P type Pole Mounts

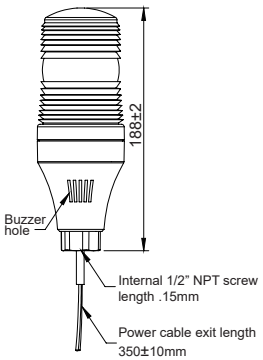

Ordering Information

MS70LT – G B 00 – R

① ② ③ ④

① **Mounting Type**	**G**	Surface Mounting
	M	Direct mounting
	P	Pole mounting
② **Light Style**	**F**	Flashing
	B	Flashing & Buzzer
③ **Power Supply**	**00**	12~24VDC
	FF	110~220VAC
④ **Lens Colors**	**R**	Red
	Y	Yellow
	G	Green
	B	Blue
	C	Clear

Specifications

Function	Flashing, Buzzer	
Power Supply	12 ~ 24VDC, 110 ~ 220VAC(AC 50/60Hz)	
Buzzer Volume	min 50 ~ max 80±5dB	
Dimension	68mm	
Lens Color	Red, Yellow, Green, Blue, Clear	
Flashing rate (2 patterns)	- Normal flashing : 75±5 time/minute - 3 pattern flashing (Emergency signal) : 130±5 time/minute	
Current consumption	Flashing type 12~24VDC: 0.12~0.16A 110~220VAC:0.04~0.05A	Flashing + Buzzer type 12~24VDC:0.16~0.21A 110~220VAC: 0.05~0.06A
Connection	UL2464 / 18AWG, AWM, 2C, 300V	
Material	Body - ABS resin Lens - PC resin	
Ambient temperature	-20 to 50°C	
Storage ambient temperature	-20 to 70°C	
Ambient Humidity	45~85% RH	
Insulation resistance	500VAC 50 / 60Hz for 1 minute	
Vibration	10 to 55Hz (cycle 1 minute) Amplitude 0.75mm X, Y, Z 1 hour in each direction	
Approval	CE(DC products only), RoHS	
Protection structure	IP65 (IP50-Buzzer type)	
Weight (DC type)	G type: app.196g M type: app.195g P type: app.198g	

* Life of the LED varies according to operating conditions and environment.

Feature settings

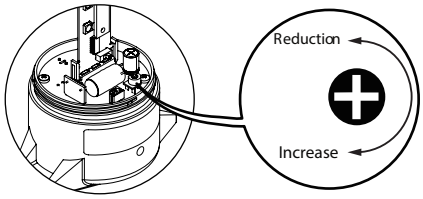

Normal flashing type | **3 Pattern flashing**

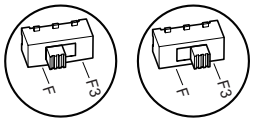

▶ **Adjusting of buzzer sound**

Min 50 ~ Max 80±5dB

Wiring Diagram

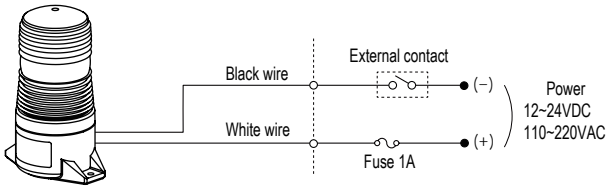

* buzzer type : When power is applied, LED flashing and buzzer operate simultaneously

See page B1 - B2 for mounting options and accessories

- low intensity strobe ideal for industrial applications
- Field replaceable snap-fit flashing lamp
- Three mounting options
- IP65

MS70S Series

D70mm Xenon Lamp Strobe Light

XENON LAMP RoHS IP65 CE

Dimensions

unit: mm

G type Surface Mounts

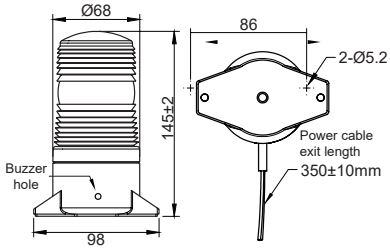

P type Pole Mounts

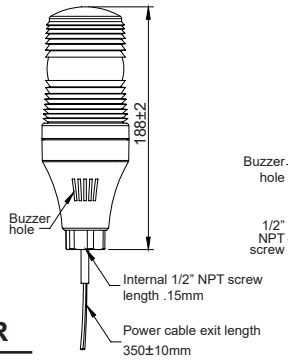

M type Direct Mounts

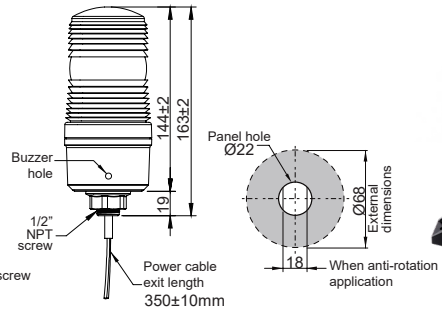

Ordering Information

MS70S – G 00 – R

① ② ③

① **Mounting Type**	**G**	Surface Mounting
	M	Direct mounting
	P	Pole mounting
② **Power Supply**	**00**	12~48VDC
	10	110VAC
	20	220VAC
③ **Lens Colors**	**R**	Red
	Y	Yellow
	G	Green
	B	Blue

How to install Xenon bulb

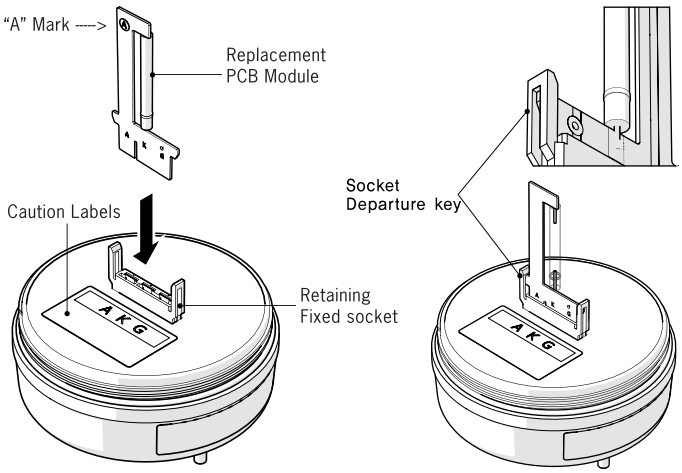

The new lamp should be inserted firmly to match the same signal A K G (or A G K) mark. Printed "A" in circuit and label.

- If you insert reverse direction, the lamp can not operate.
- Insert the lamp circuit board correctly, not to inclined.

See page B1 - B2 for mounting options and accessories

Specifications

Function	Flashing
Power Supply	12 ~ 48VDC, 110VAC, 220VAC(AC 50/60Hz)
Dimension	68 mm
Lens Color	Red, Yellow, Green, Blue
Flashing rate	12~48VDC : 80±5 times per minute 110VAC : 77±5 times per minute 220VAC : 60±5times per minute
Current consumption	12~48VDC : 0.08~0.2A 110VAC : 0.07A 220VAC : 0.04A
Connection	UL2464/18AWG, AWM, 2C, 300V
Material	Body - ABS resin Lens - PC resin
Ambient temperature	-20 to 50°C
Storage ambient temperature	-20 to 70°C
Ambient Humidity	45~85% RH
Insulation resistance	500VAC 50 / 60Hz for 1 minute
Vibration	10 to 55Hz (cycle 1 minute) Amplitude 0.75mm X, Y, Z 1 hour in each direction
Approval	RoHS
Protection structure	IP65
Weight (DC type)	G type: app.196g M type: app.195g P type: app.198g

*Lifetime of the lamp varies according to operating conditions and environment.

Wiring Diagram

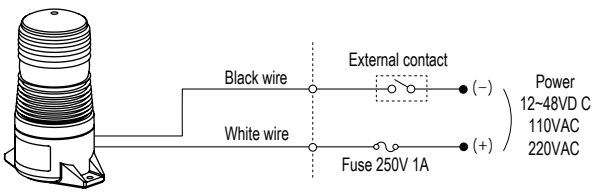

MS70S -LAMP-AL	
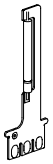	Xenon lamp Type: 3W Lamp life: App 2,000 hours

MS70M Series

D70mm Multicolored LED Signal Light

- Up to 7 color combinations available
- Three Mounting Options
- Two lens options for clear or softer view
- IP65 (buzzer type -IP50)

Dimensions

unit: mm

G type Surface Mounts

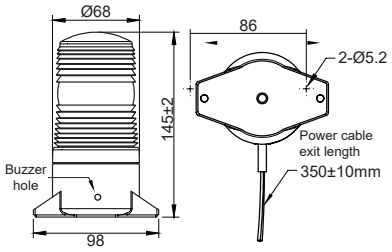

M type Direct Mounts

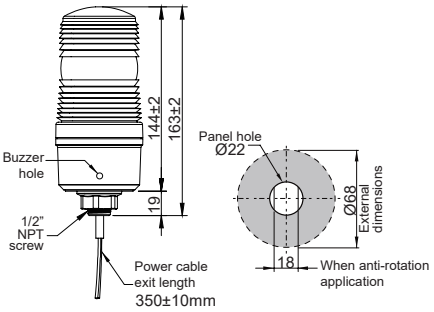

P type Pole Mounts

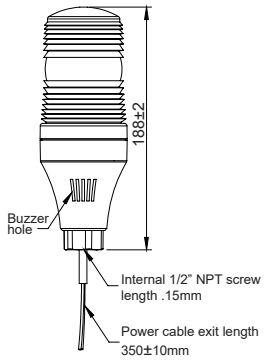

Specifications

Function	Steady, Flashing, Buzzer	
Power Supply	12 ~ 24VDC, 110 ~ 220VAC(AC 50/60Hz)	
Alarm Sound Level	min 50 ~ max 75±5dB	
Dimension	68mm	
Lens Color	Clear / Milky white	
Flashing rate	12VDC : 65±5 times per minute 24VDC : 60±5 times per minute 110~220VAC : 70±5times per minute	
Current consumption	LED Steady 12~24VDC: 0.22A 110~220VAC: 0.04~0.06A	LED Steady +Buzzer 12~24VDC: 0.26A 110~220VAC: 0.05~0.06A
Connection	UL1007/22AWG	
Material	Body - ABS resin Lens - PC resin	
Ambient temperature	-20 to 50°C	
Storage ambient temperature	-20 to 70°C	
Ambient Humidity	45~85% RH	
Insulation resistance	500VAC 50 / 60Hz for 1 minute	
Vibration	10 to 55Hz (cycle 1 minute) Amplitude 0.75mm X, Y, Z 1 hour in each direction	
Approval	RoHS	
Protection structure	IP65 (IP50-Buzzer type)	
Weight (DC type)	G type: app.196g M type: app.195g P type: app.198g	

Wiring Diagram

12~24VDC

Steady Lights (with Buzzer)

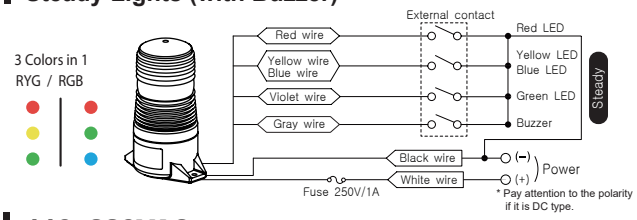

110~220VAC

Steady Lights (with Buzzer)

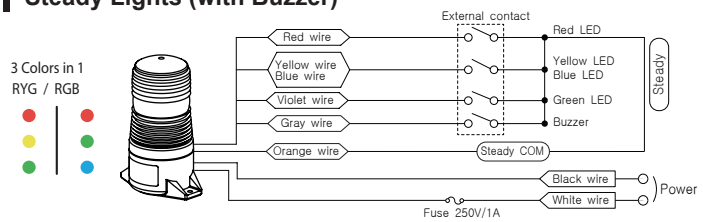

12~24VDC , 110~220VAC

Steady & Flashing Lights (with Buzzer)

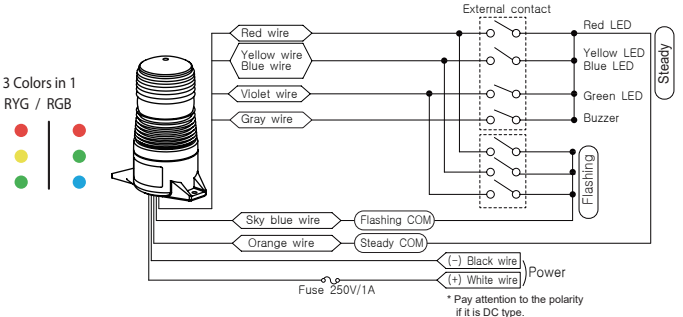

Ordering Information

MS70M – G Z 00 – RGB M

① Mounting Type	G	Surface Mounting
	M	Direct mounting
	P	Pole mounting
② Light Style	F	Steady & Flashing
	B	Steady & Buzzer
	Z	Steady & Flashing & Buzzer
③ Power Supply	00	12~24VDC
	FF	110~220VAC
④ LED Colors	RBG	Red & Blue & Green
	RYG	Red & Yellow & Green
⑤ Lens Colors	No Mark	Clear lens
	M	Milky lens

* Life of the LED varies according to operating conditions and environment.

Feature settings

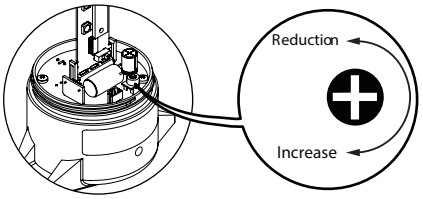

▶ **Adjusting of buzzer sound**
Min 50 ~ Max 75±5dB

See page B1 - B2 for mounting options and accessories